Digging HTC Touch

Deassembly: More hardware design thinking

Openmoko
open. mobile. free.

HTC Touch at a glance

Available:	Q3 2007
Network:	GSM 900/1800/1900
Data:	GPRS + EDGE + WIFI
Screen:	240x320 pixels, 65k colours,QVGA
Camera:	2 megapixeks FF
Size:	Compact PDA-style device 100 x 58 x **14**mm / 112 grams
Bluetooth:	Yes
Memory Card:	microSD
Infra-red:	No
Polyphonic:	Yes
Java:	Limited
Battery life:	5 hours talktime / 8 days standby

openmoko

Inner touch

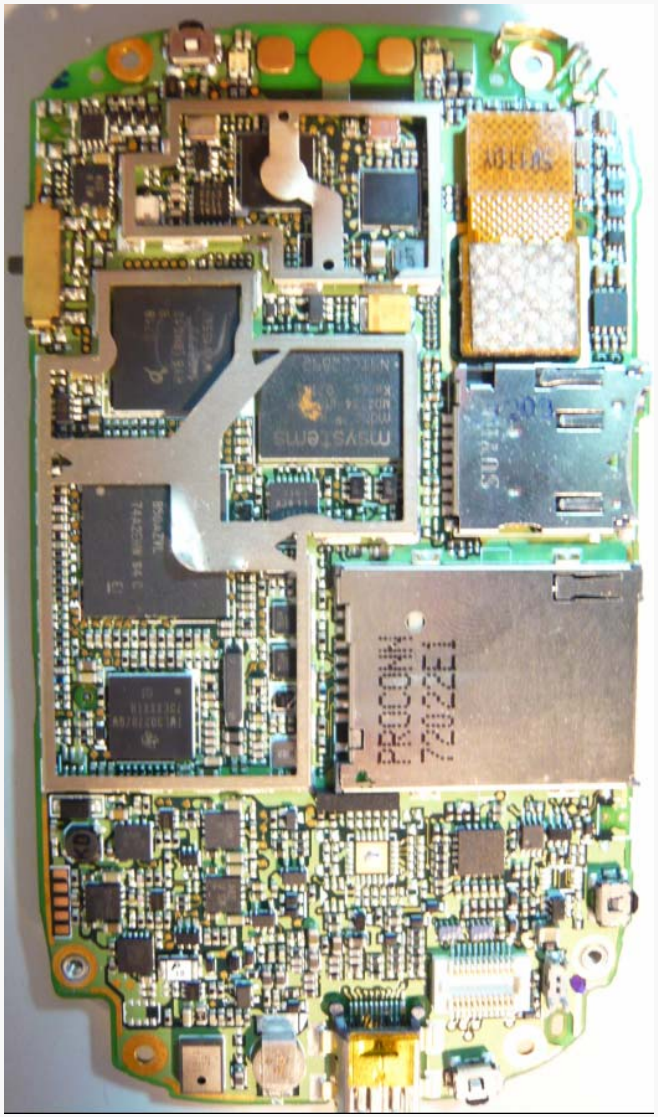

openmoko

Touch Engine

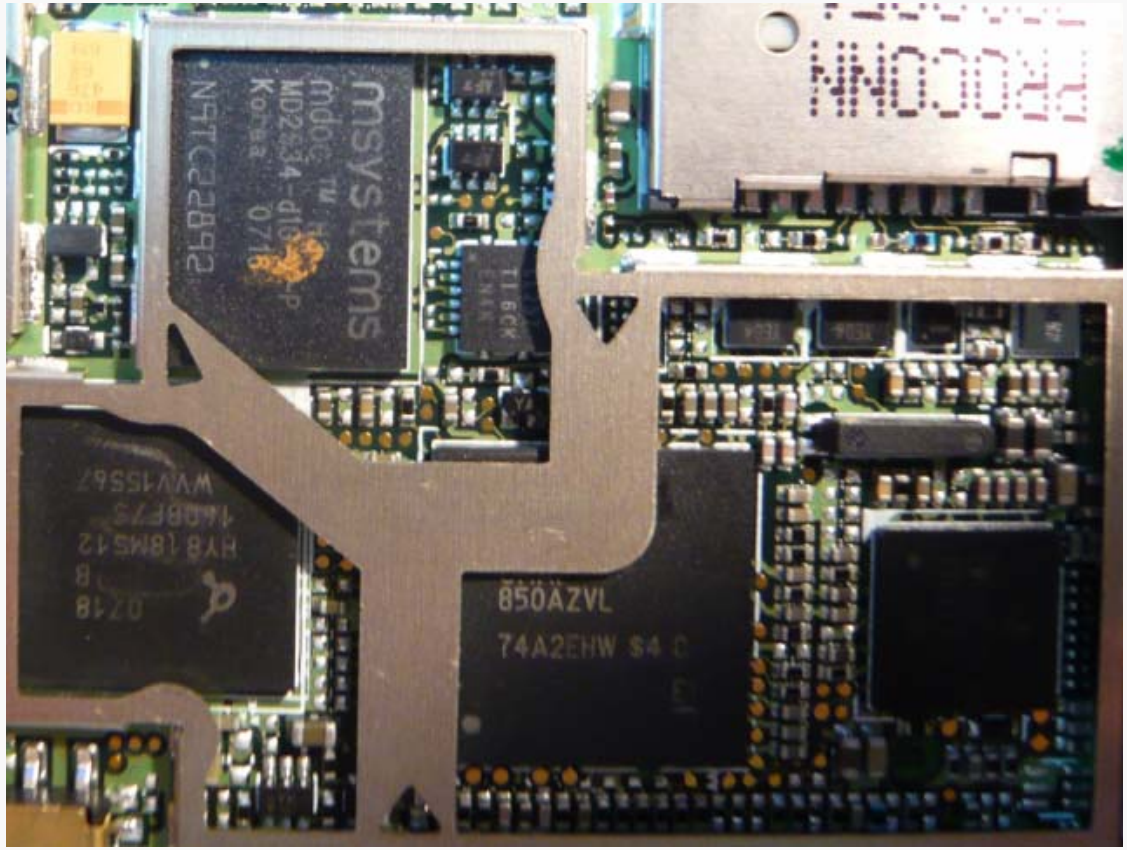

MCU	TI OMAP 850(ARM9 198MHz) +GSM DBB-G2 (ARM7)
NAND	Msystems 4bit MLC (128MB)
DDR	Qimonda 133 MHz 4 Banks × 8 Mbit × 16 Low Power 1.8V (64MB)
ABB	TI TWL3027(Syren)

openmoko

OMAP 850 Block

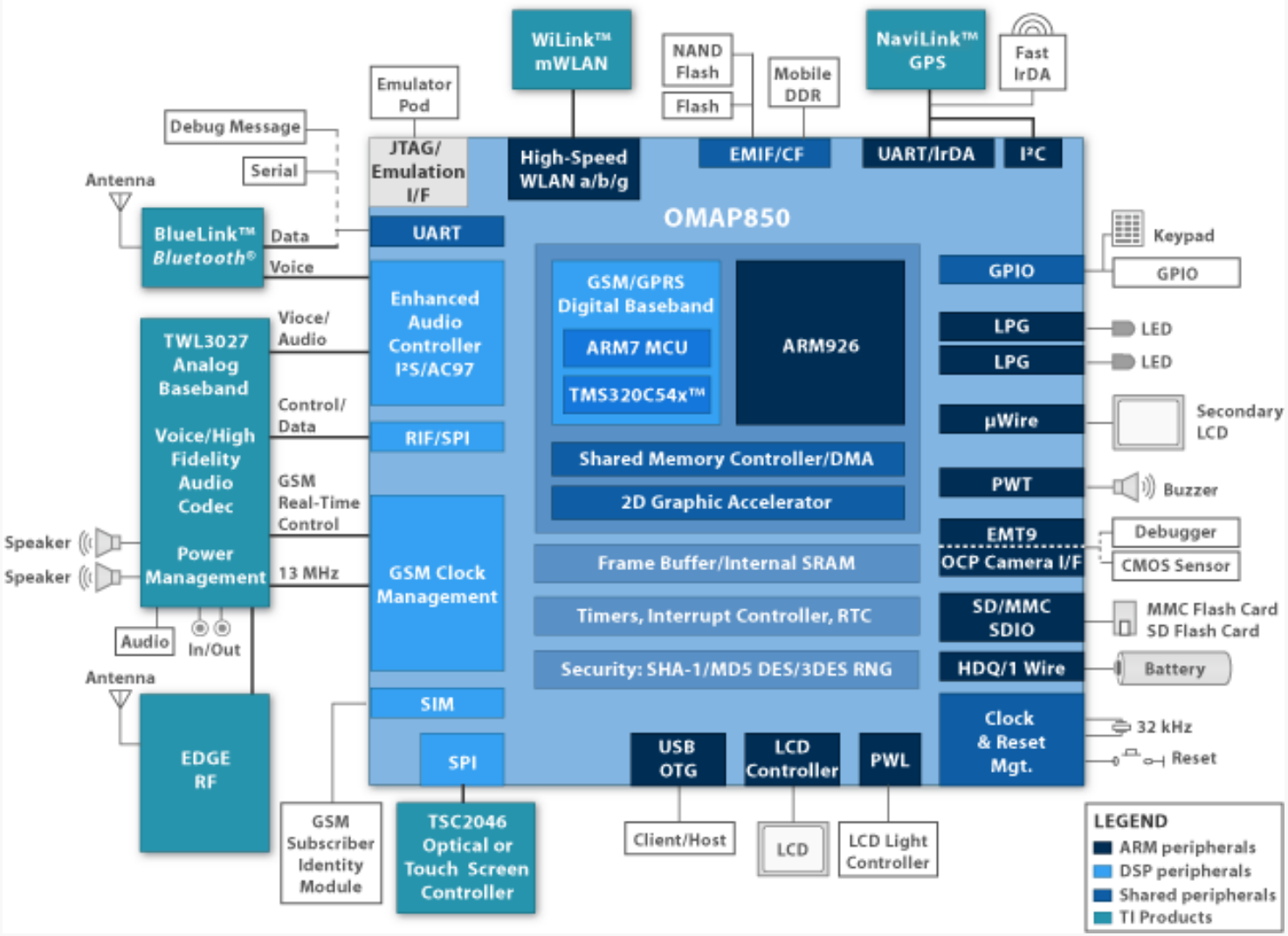

openmoko

Touch Air

WIFI	802.11b/g WL1251 single chip
Bluetooth	BRF6300 2.0+EDR

TI WiLink 4.0

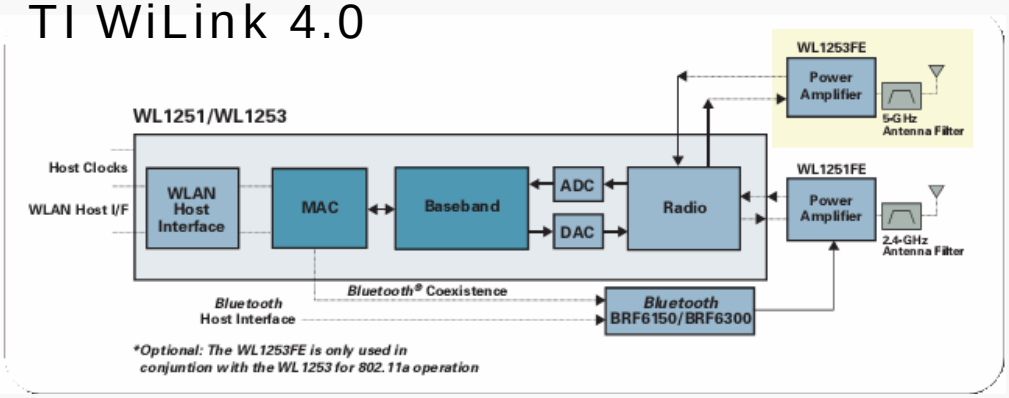

openmoko

Touch Air (Cont.)

GSM Transceiver	Infineon PMB6272
GSM PA	RFMD 3158 Quad-Band GSM/EDGE
ASM	Unkown
XTAL	26MHz

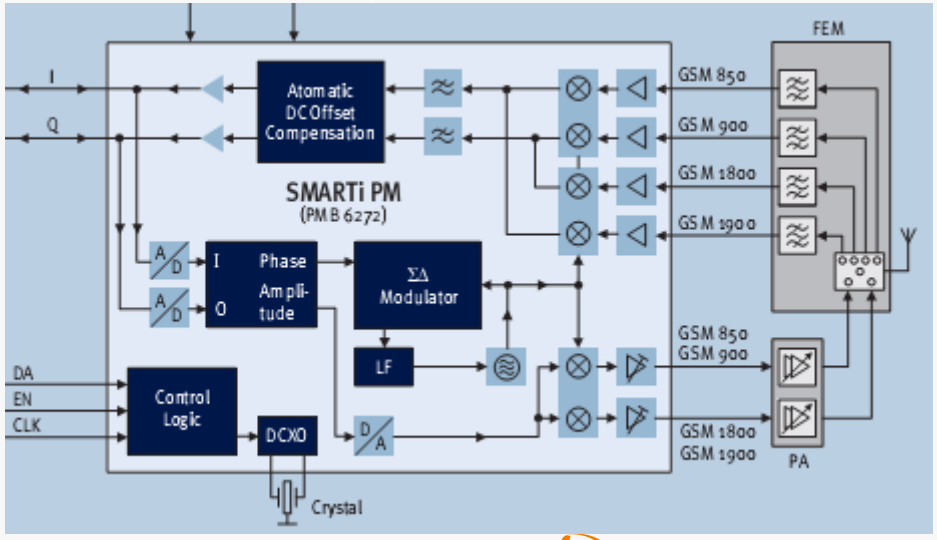

openmoko

Power to touch

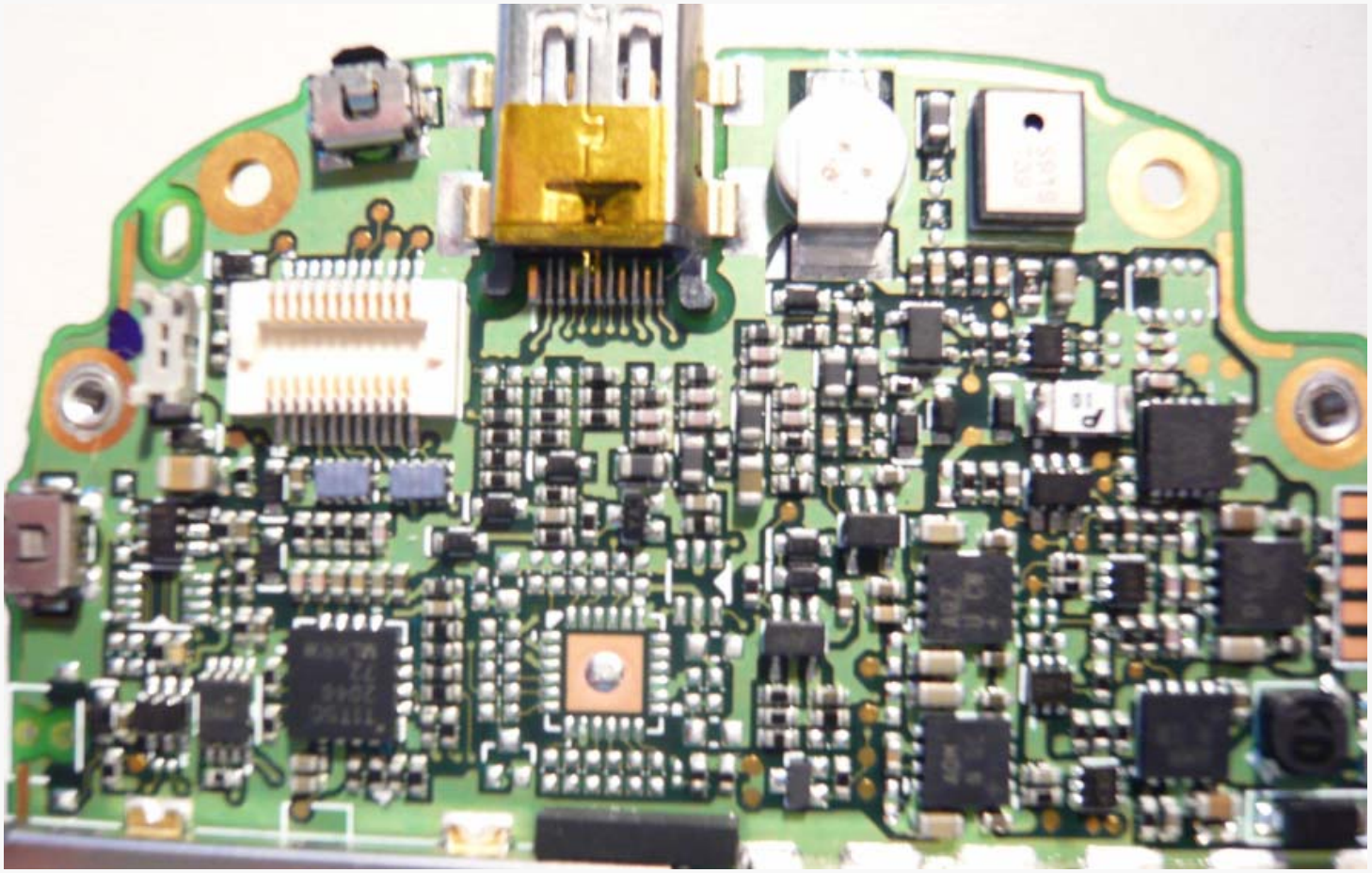

TI OMAP platform uses discrete power switches, LDOs and DC/DC converters to supply the wanted voltage of every part. These chips vendor are almost TI undoubtedly.

openmoko

Touch to touch

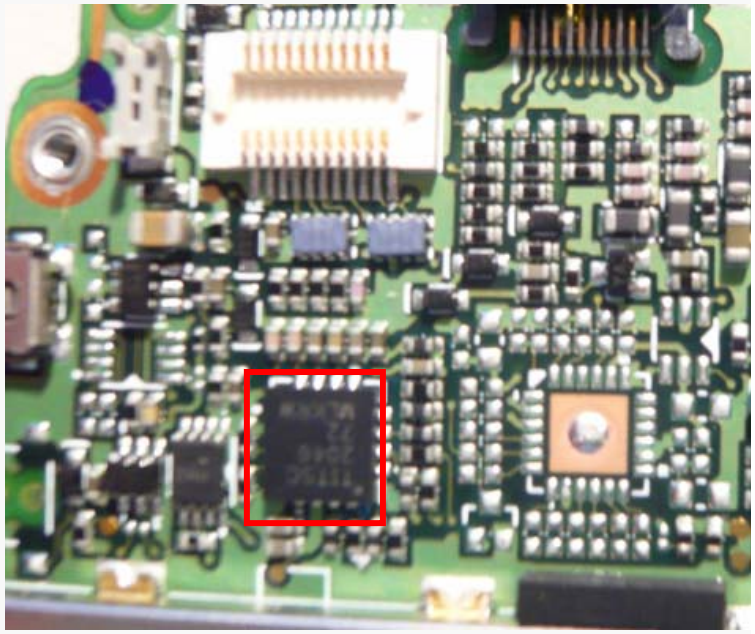

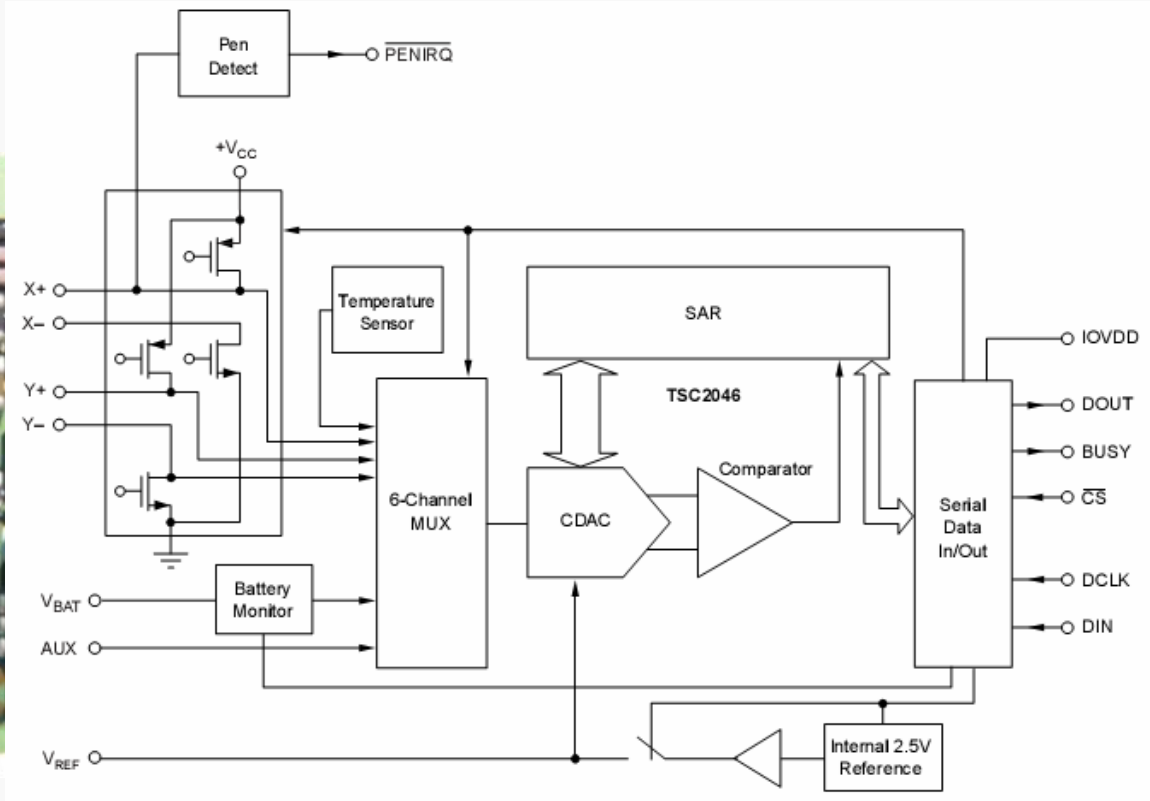

openmoko

Touch interface

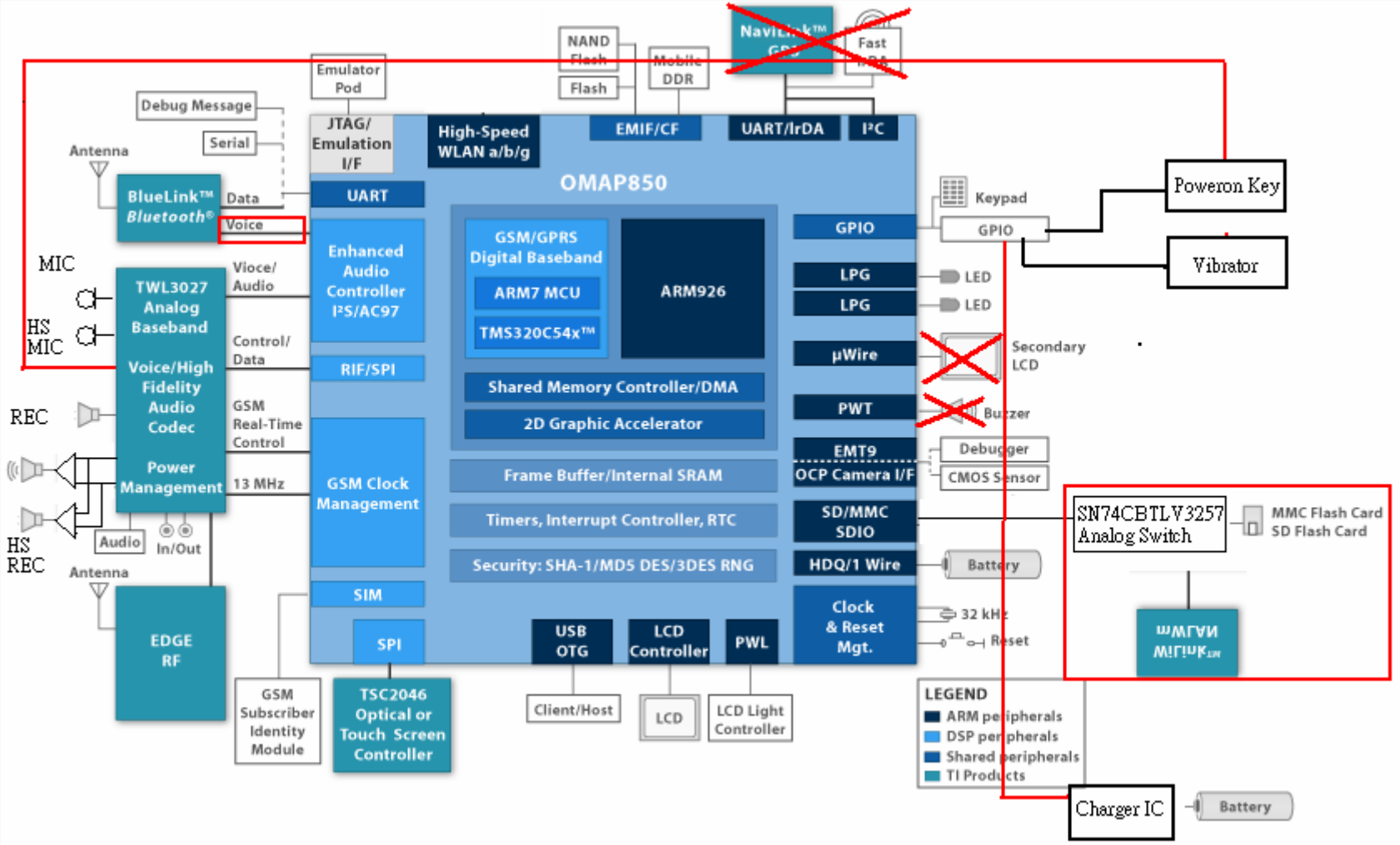

openmoko

SDIO interface using analog switch

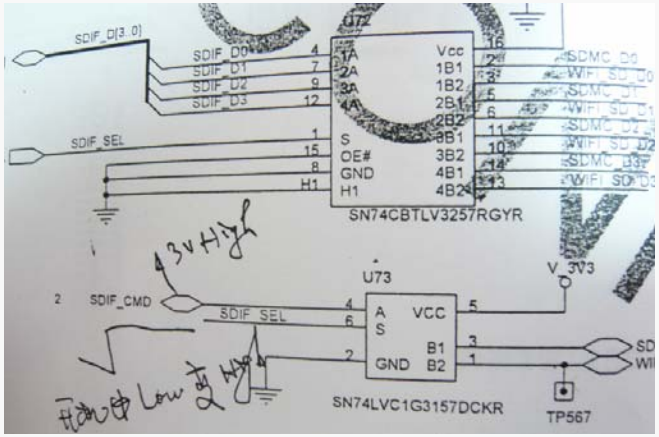

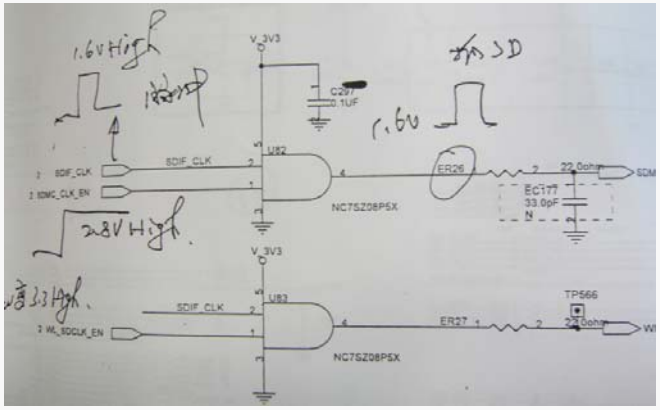

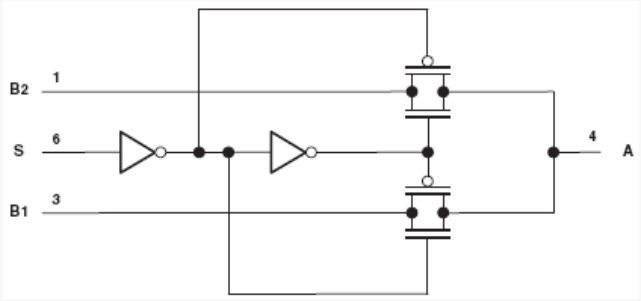

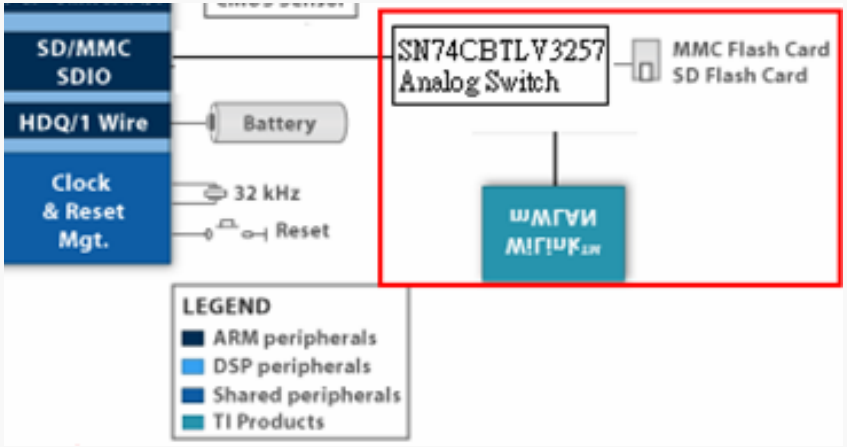

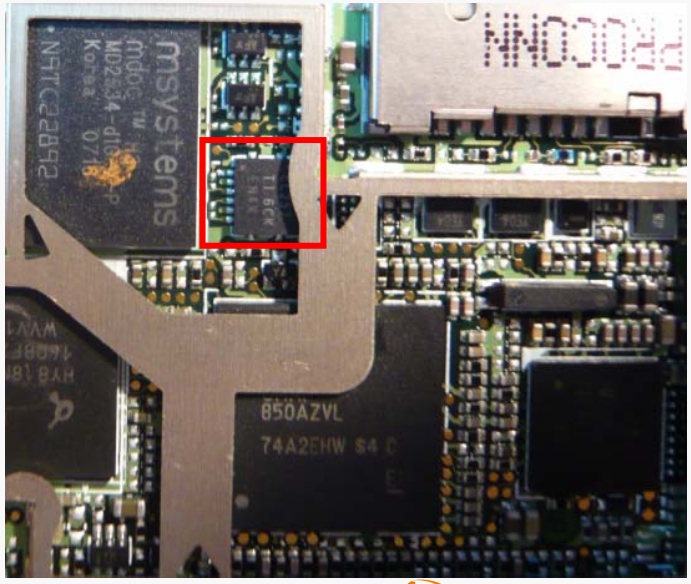

openmoko

SPI implements PCM for BT

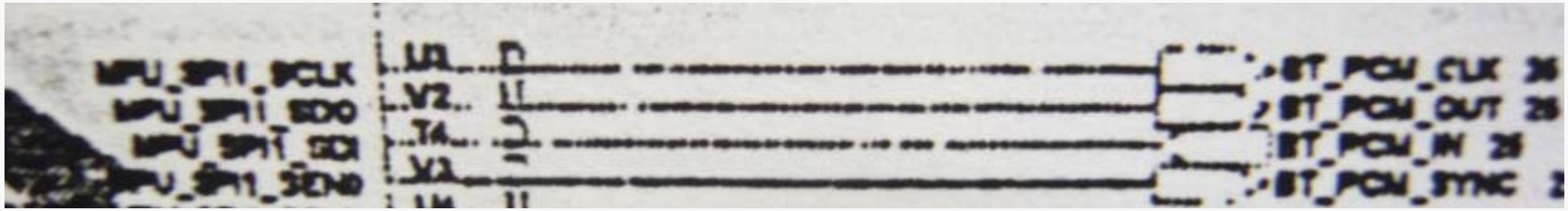

Touch FLO and proximity sensor

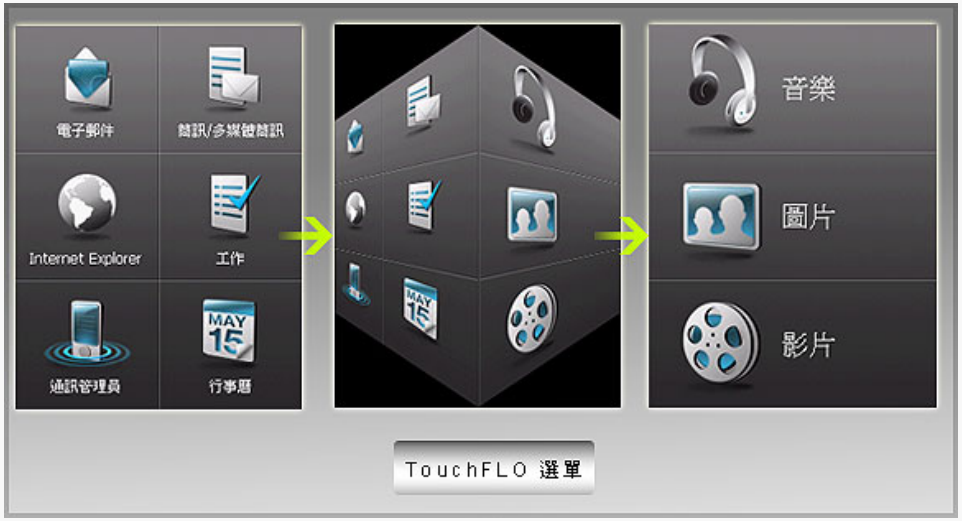

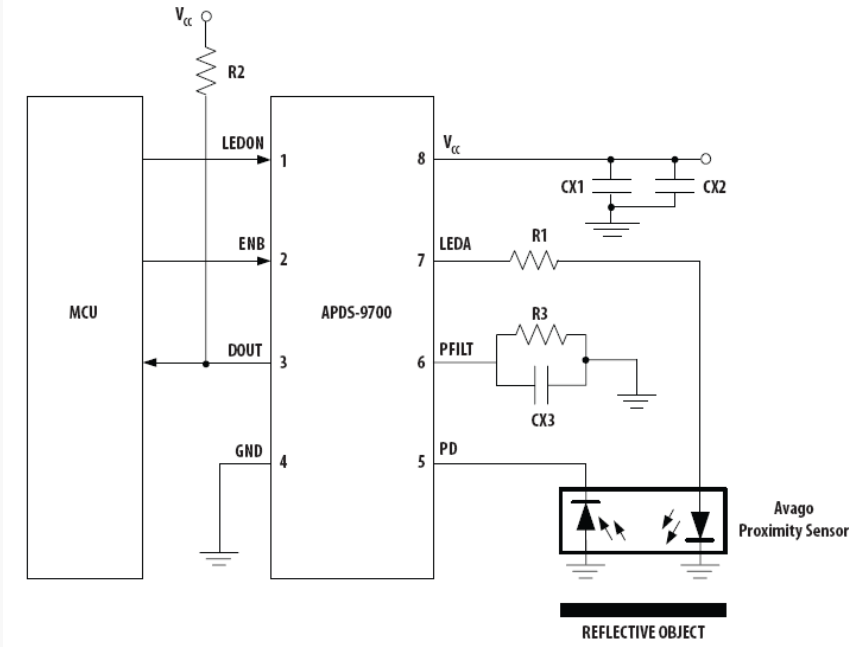

openmoko

Touch cover

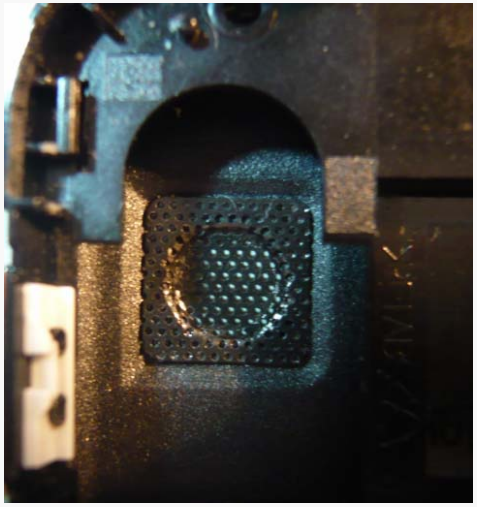

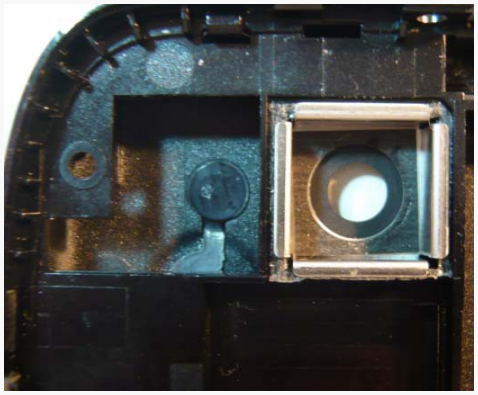

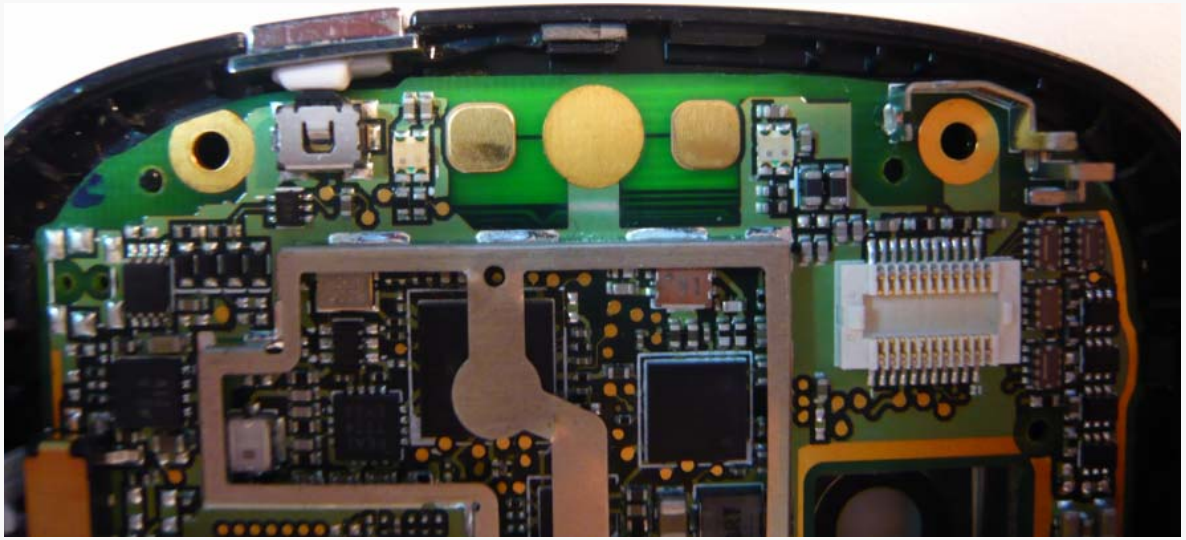

openmoko

Thinner Touch

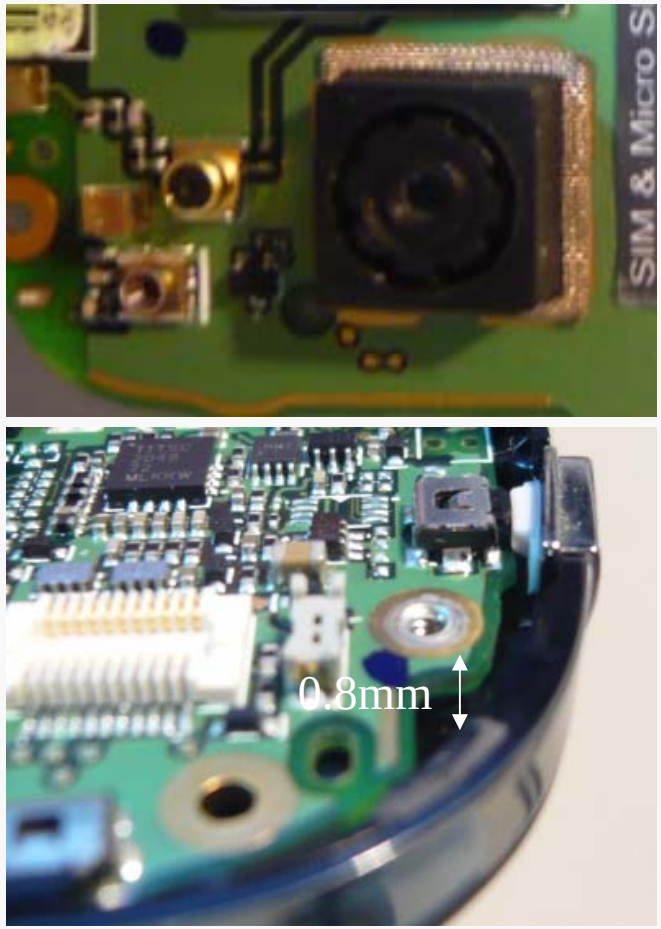

- Thinner LCM
- Low Profile Antenna
- Low Profile POGO Pin
- Low Profile Camera Module
- Speaker without chamber

Thinking from touch

Power management
Battery life, charging, thermal durability

Materials
Structural, functional, optical, decorative

Mechanics
Structures, user interface, mechanisms

Cameras and optics

Electronics
Semiconductors, microelectromechanical components

Algorithms
Signal processing, image and sound processing

User experience
Ergonomy, usability, user interfaces, user behavior, security

GSM/WCDMA
Strong IPR portfolio

Software and Applications
Platforms, middleware, architectures

Voice & Video codecs
Improved quality

Proximity
WLAN, GPS, NFC, Bluetooth

openmoko

Thinking from touch (Cont.)

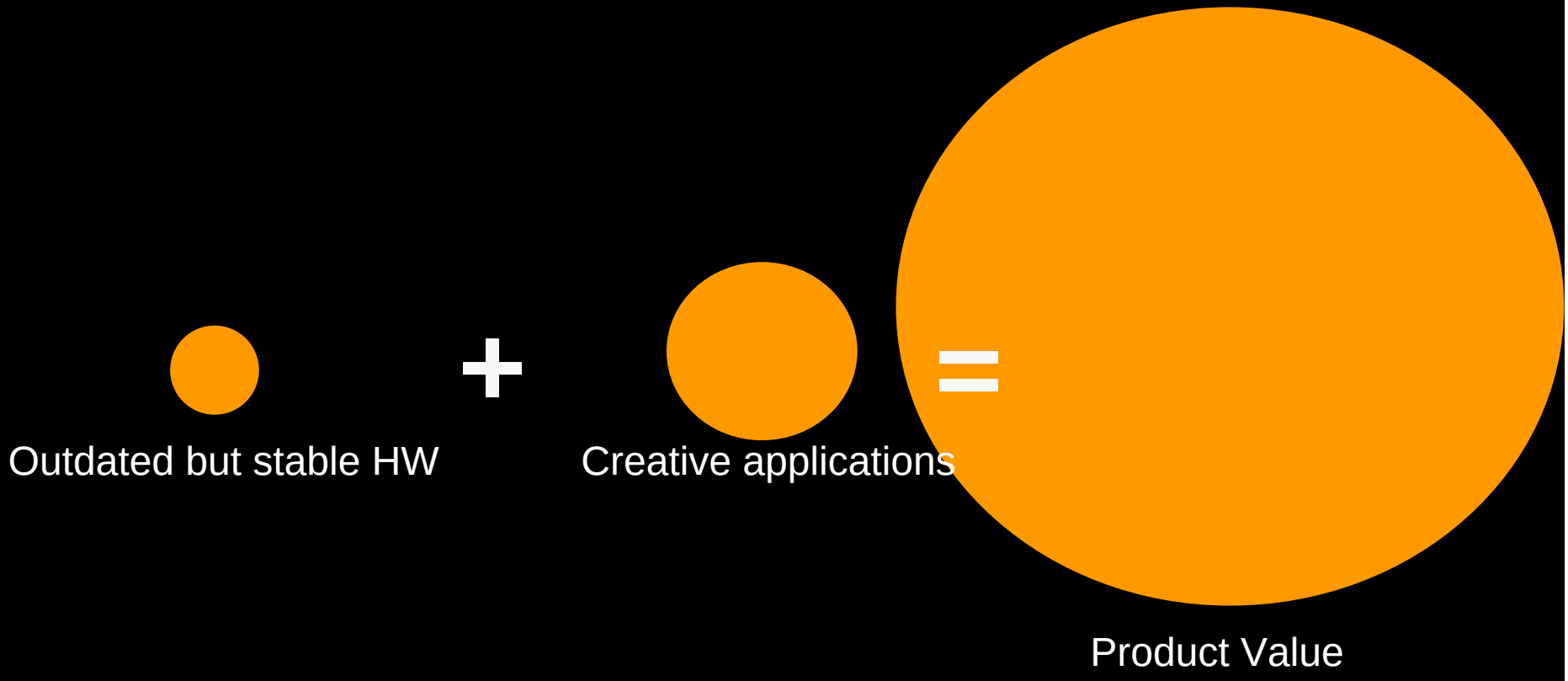

openmoko

Questions??

openmoko